back

Buccaneer GT Combination Boiler
Falcon GTE Combination Boiler

Installation, Assembly and Servicing

Oil or Gas Fired Boilers

Assembly and Installation Instructions for Ideal Buccaneer and Falcon Oil or Gas Fired heating combination boilers should be read in conjunction with the Boiler Assembly Instructions enclosed and any other technical publication supplied with the burner.

CAUTION: To avoid the possibility of injury during the installation, servicing or cleaning of this appliance care should be taken when handling edges of sheet steel components.

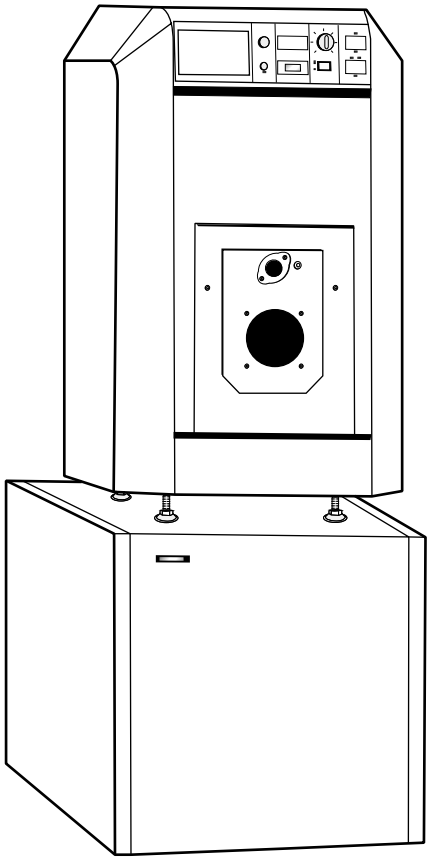

BUC5034

Ideal BOILERS

WARNING

The boiler shall be assembled and installed by a qualified professional only.

Strict compliance with these assembly, installation and maintenance instructions is a precondition for the correct operation of the boiler

Contents

1. General 2

1.1 Technical Specifications of Combination Boilers .. 3

1.2 Main Dimensions 4

2. Installing The Boiler 5

2.1 Boiler Location 5

2.2 Ventilation 5

2.3 Assembly 5

2.4 Levelling 5

2.5 Hydraulic Connections 6

2.6 Connection of the Domestic Hot Water Circuit 6

2.7 Important Recommendations for connecting the Boiler to the Heating Circuit and the drinking Water Supply 6

2.8 Example of Installation 7

3. Assembly 8

3.1 Buccaneer GT Combination Boiler 8

3.2 Falcon GTE Combination Boiler 11

3.3 Hydraulic Boiler to Tank Connections (Kit BH46) . 13

4. Electrical Connections and Controls 14

4.1 Description 14

4.2 Operating Principle 14

4.3 Electrical Connections 15

4.4 Domestic Hot Water Priority Regulation Mode with MB1 15

4.5 MB1 Domestic Hot Water Sensor 16

4.6 Heating and Domestic Hot Water Installation 19

4.7 Connecting the Burner 19

5. Commissioning 20

5.1 Starting Up 20

5.2 Commissioning Secondary Circuit 20

6. Maintenance and Periodic Checks 21

1. GENERAL

The boilers of the Buccaneer GT and Falcon GTE Combination Boiler are automatic independent hot-water boilers designed for connecting to a flue which require a separate fuel oil or gas burner.

Models available:

- Heating and domestic hot water:
  - Buccaneer GT Combination Boiler - boiler with an MLS 150 litre domestic hot water tank and a standard control panel which is fitted with an MB1 domestic hot water priority and regulation unit.
  - Falcon GTE Combination Boiler - boiler with an MLS 150 or 250 litre domestic hot water tank and a standard control panel which is fitted with an MBI domestic hot water priority and regulation unit.
- An option of a Correx electric anode (AM7) may be fitted to any tank replacing the standard magnesium anode for long life.

Important Recommendations

- The boiler/tank assembly must be installed in premises free from frost. Placing the tank as closely as possible to the water supply will minimise energy losses in the pipework which should be lagged in all cases.
- It is advisable to place the boiler/tank assembly on a plinth so that the area can be easily cleaned.

Description

The tanks in high-grade steel are lined on the inside with a vitrified enamel at 850ºC to food standard quality, which protects the tank from corrosion.

The tank is also protected from corrosion by a magnesium anode which **must be checked every two years and replaced if necessary** (refer to the "Maintenance" chapter on page 21). The heat exchanger fitted in the tank is constructed of smooth tubing. Those surfaces coming into contact with domestic hot water are enamelled.

MLS tanks are heavily insulated in CFC-free polyurethane foam, thus reducing heat losses to a minimum.

The outer casing is in painted sheet metal.

The tank has a thermometer.

WARNINGS

- Installation, commissioning and maintenance must be carried out by a qualified technician, in accordance with installation practices and the instructions in this document.
- Regular maintenance of the equipment is necessary to ensure safe and reliable performance.
- For the guarantee to remain valid, no modifications must be made to the domestic hot water tank.
- Central heating water and domestic hot water must never come into contact. In particular, the exchanger must not circulate domestic hot water.

1.1 Technical Specifications of Combination Boilers

Boiler:

Maximum operating pressure	:	4 bar
Maximum operating temperature	:	100ºC
Maximum safety temperature of boiler (as per TRD 702)	:	120ºC
Boiler thermostat setting	:	30 - 85ºC
Safety thermostat setting	:	110ºC

MLS Calorifier:

Primary circuit (heating water)

- Maximum operating temperature	:	95ºC
- Maximum operating pressure	:	12 bar

Secondary circuit (domestic hot water)

- Maximum operating temperature	:	95ºC
- Maximum operating pressure	:	10 bar

Bucaneer GT - Domestic Hot Water Production		**3**	**4**	**5**
MLS tank capacity	litres	150	150	150
Continuous flow rate (1) (2)	litres/h	640	780	780
Maximum flow rate over 10mn (1) (2) (3)	litres/10mn	235	260	260
Weight (Boiler and tank)	kg	228	256	284

Falcon GTE - Domestic Hot Water Production		**4 (150/250)**	**5 (150/250)**
MLS tank capacity	litres	150/250	150/250
Continuous flow rate (1) (2)	litres/h	780/950	780/950
Maximum flow rate over 10mn (1) (2) (3)	litres/10mn	260/380	260/380
Weight (boiler and tank) 150 litre	kg	319	358
Weight (boiler and tank) 250 litre	kg	356	395

(1) Domestic cold water at 10ºC - Domestic hot water at 45ºC - Primary at 80ºC
(2) Storage temperature : 60ºC
(3) Boiler temperature : 80ºC - Ambient temperature : 20ºC

Tank Details

Note: With IDEAL boilers, the setting limits the temperature of the primary circuit at the beginning to 75ºC (adjustment is possible from 50ºC to 95ºC).

Tank Type		**MLS 150/III**	**MLS 250/II**
Primary circuit (central heating water)			
Water capacity of coil	litres	5.9	7.2
Exchange surface of coil	m^2	0.92	1.2
Secondary circuit (sanitary water)			
Water capacity	litres	150	250
Delivery weight	kg	100	130

1.2 Main Dimensions

Buccaneer GT Combination Boiler

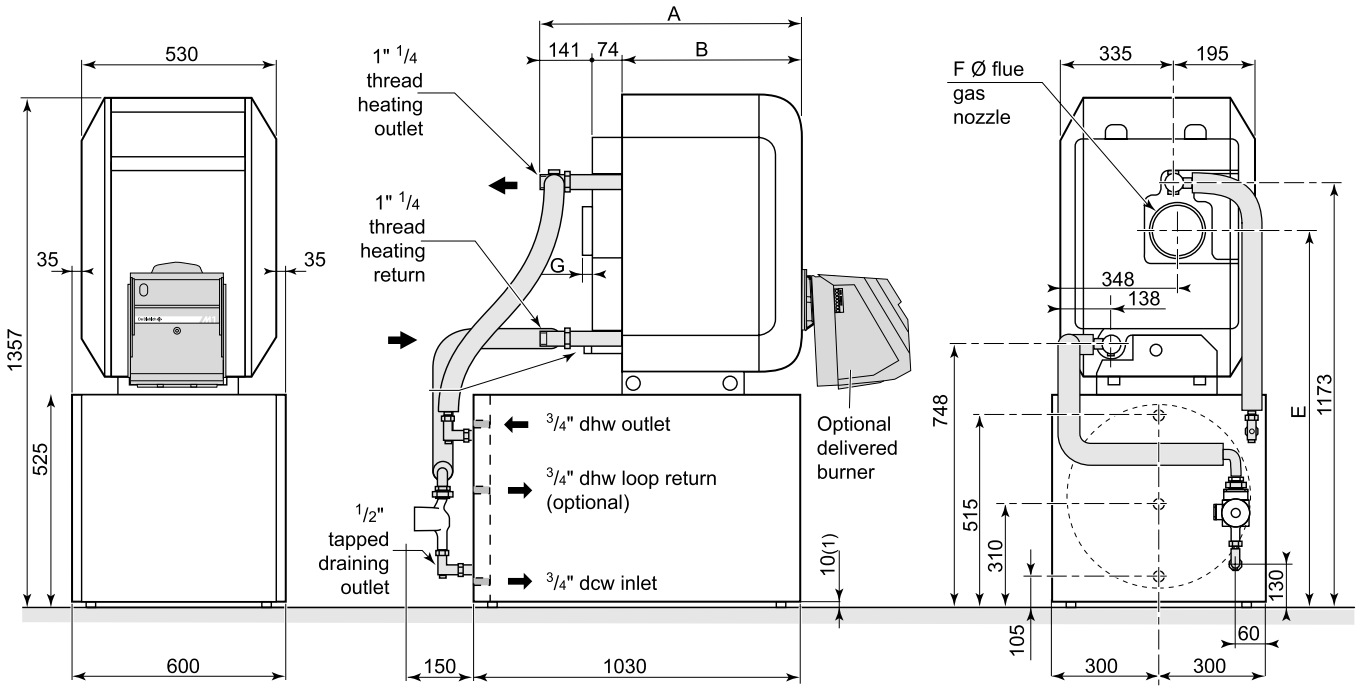

GT	A	B	E	Ø F	G
3	686	471	1009	125	18
4	813	598	1009	125	18
5	940	725	1009	125	18

BUC5000

Falcon GTE Combination Boiler

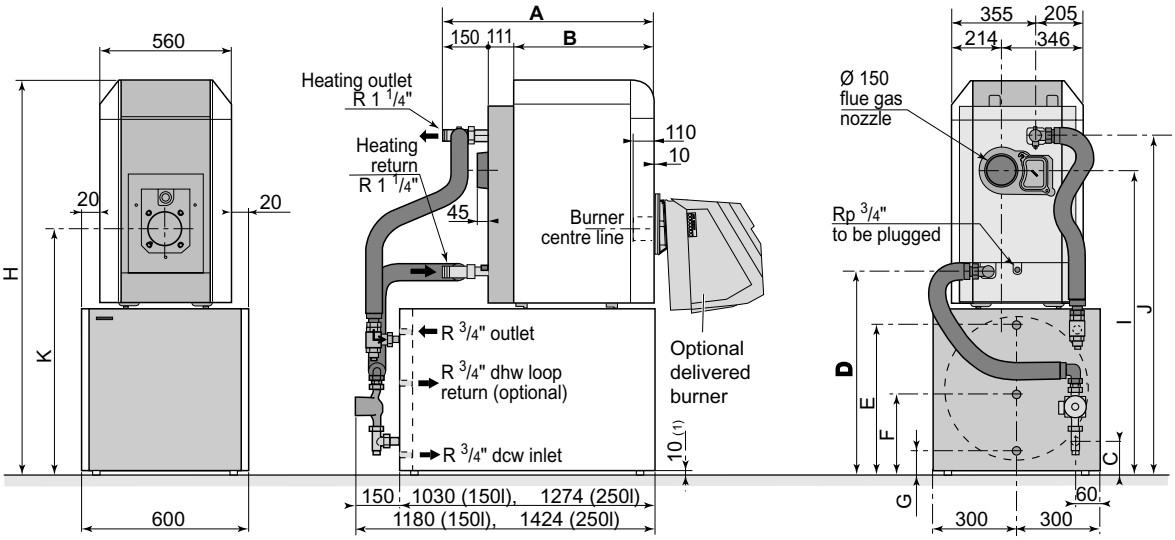

(1) Adjustable feet: basic height 10 mm with 9-15 mm adjust

R : Threaded

GTE	A	B	C	D	E	F	G	H	I	JJ
4/150	1853	592	90	738	47	5270	65	1537	1158	1303
5/150	1980	719	90	738	475	270	65	1537	1158	1303
4/250	1853	592	130	788	51	5310	105	1587	1208	1353
5/250	1980	719	130	788	515	310	105	1587	1208	1353

BUC5025

2. INSTALLING THE BOILER

2.1 Boiler Location

Sufficient space shall be left clear around the boiler.

The figure stated in metres in the drawings below are the minimum recommended dimensions for providing easy access around the boiler.

Buccaneer GT

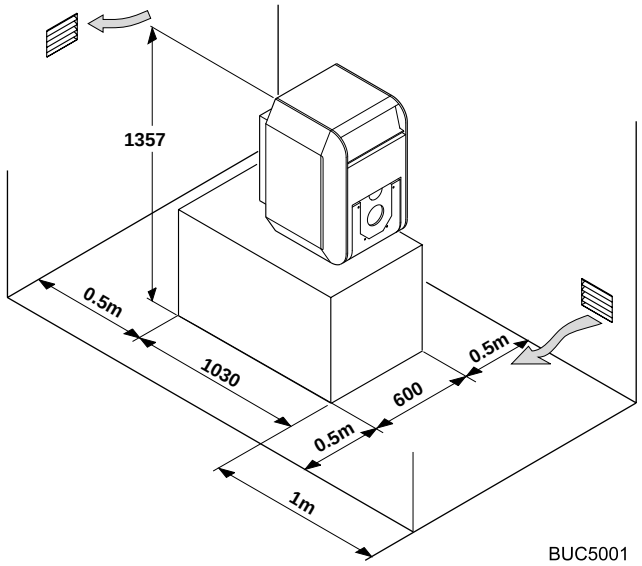

Falcon GTE

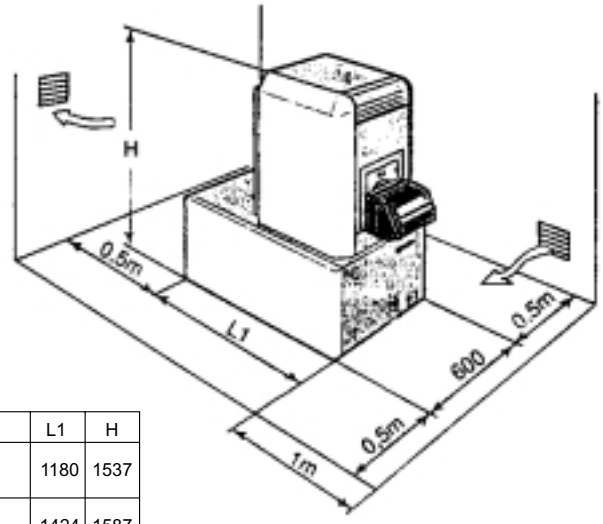

GTE	L1	H
4/150 I 5/150 I	1180	1537
4/250 I 5/250 I	1424	1587

2.2 Ventilation

The location of air inlets in relation to the high ventilation openings shall ensure that the air is renewed in the entire volume of the boiler room. The ventilation shall comply with any applicable national or local regulations.

2.3 Assembly

The upper section of the MLS 150 tank (only) is provided with marks allowing precise positioning of IDEAL boilers from the Buccaneer GT or Falcon GTE range (see leaflet provided with these units).

WARNING

Please note that boilers installed in or close to rooms in which the atmosphere is polluted with chlorine or fluorine compounds may be subject to high corrosion.

For example: hairdressing salons, industrial premises (solvents), cooling equipment etc.

Boilers installed in such locations shall not be covered by the warranty.

2.4 Levelling

Levelling of the unit is carried out using the 4 bolts H 10 x 20 (packed in the instruction bag) screwed into the base.

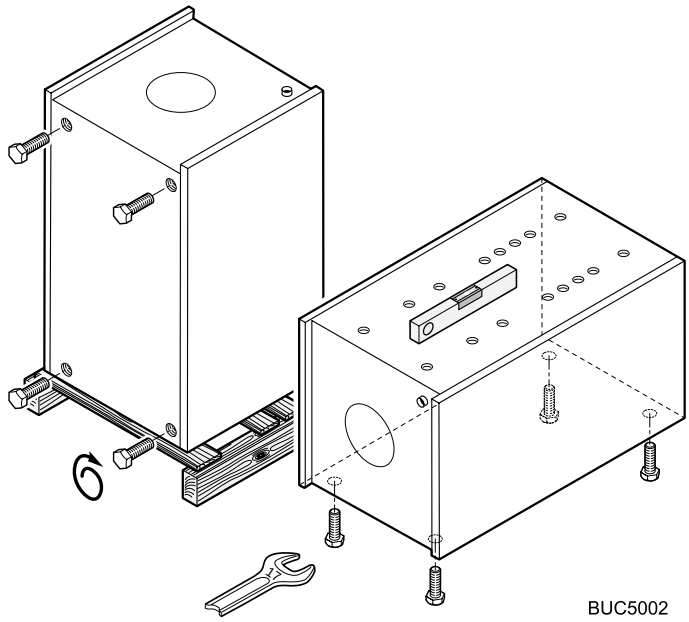

2.5 Hydraulic Connections

Installation must be carried out following the regulations in force, trade practices and the recommendations contained in this leaflet.

WARNING

There must be no obstructions, complete or partial, between the boiler and the safety valves.

WARNING

Heating installations must be designed and assembled so that central heating water and any products introduced into it cannot find their way into the drinking water system. A removable connection must be installed for filling the heating circuit according to current regulations.

- Before making the hydraulic connections for the central heating circuit, it is essential to flush the water system to eliminate any dirt which may damage certain parts (safety valve, pumps, flap valves . . .)
- Be careful to isolate hydraulically the primary and secondary circuits using stop valves. This will facilitate matters during maintenance.

  Inclusion of these valves means that maintenance of the unit and its parts can be carried out without having to empty it. They also mean that the tank can be carried out without having to empty it. They also mean that the tank can be isolated whilst a watertight pressure test is carried out if the test pressure is above the pressure admitted by the tank.

2.6 Connection of the Domestic Hot Water Circuit

The domestic hot water units can operate under a maximum service pressure of 10 bar. Generally, they operate at 7 bar.

- Before connecting the domestic hot water circuit, the pipework must be flushed to wash out any metal or other dirt which could damage certain parts (safety units, pump, valves . . .).
- The connection between the safety valve and the unit must not contain any section parts. Also, the flow pipe for the safety valve must not be obstructed. If the supply pressure exceeds 5.5 bar, a pressure reducer must be included "upstream" of the tank. It is advisable to site the pressure reducer "downflow" of the water meter so as to have the same pressure in all the pipes.
- Include a drain valve in the boiler as well as a "syphon funnel" for the safety unit.
- Connection to the cold water supply must be carried out according to the drawing in section 2.8. Components must conform to the standards and regulations in force. A stop valve is installed into the cold water supply.

WARNING

If the distribution pipework is in copper, a sleeve in steel, cast iron or insulating material must be placed between the hot water outlet of the unit and this pipework so as to avoid any corrosion at the level of the branch pipe.

Notes:

- The safety unit and its connection to the tank must be at least of the same diameter as the tanks sanitary cold water supply pipework (minimum 3/4").
- The safety unit's outlet pipe must have sufficient, continuous slope and its section must be at least equal to that of the orifice for the safety unit outlet (so as to avoid slowing down the water flow when there is an excess of pressure).
- The level of the safety unit must be below that of the cold water inlet so it can be drained. If this is not the case, install a draining pipe at the lowest point of the tank (see drawing in Section 2.8).
- To ensure hot water as soon as the taps are opened, a circulation loop between the mains supply and the re-circulation pipes of the unit can be installed.

2.7 Important Recommendations for Connecting the Boiler to the Heating Circuit and the Drinking Water Supply

The installation shall be made in keeping with applicable regulations and codes of practice and the recommendations contained in these instructions.

The expansion vessel shall be connected to the boiler without any valve or stop valve between the boiler and the expansion vessel.

The heating system shall be designed and installed in a way as to prevent the water from the heating circuit and any substances added to it from flowing back into the drinking water circuit located before it. The installation shall not be directly connected to the drinking water system.

As a general rule, a check valve shall be fitted on the cold water supply pipe.

VERY IMPORTANT: under safety rules, a sealed safety valve calibrated to 7 bar shall be fitted on the cold water intake pipe of the hot water tank. We recommend membrane type hydraulic safety devices with the NF mark.

During normal valve operation some drops of water are lost each time the water is heated. This apparent leak is not only normal, but is actually a sign that the valve is operating correctly.

The safety valve shall always be placed on the cold water supply pipe and no valve or tap shall be fitted between the safety valve and the tank.

In order to ensure the continuous circulation of hot water in the installation and be able to draw hot water as soon as a tap is opened, a circulation loop may be installed between the drawing points and the tank recirculation tube. A non return valve shall be fitted on this loop.

2.8 Example of Installation

The boiler-to-tank connection kit is placed between points A and B between the boiler and the heating circuit.

Example: Buccaneer GT

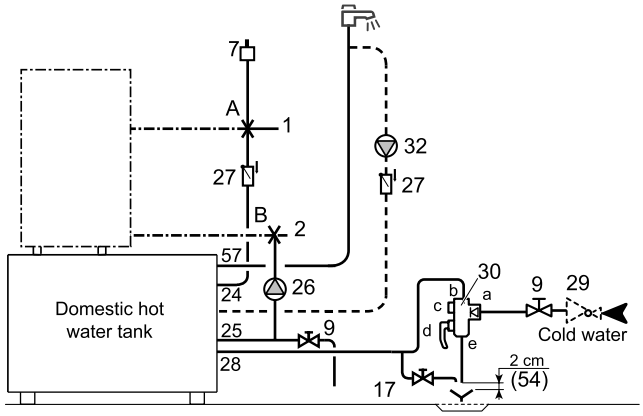

1 Heating outlet
2 Heating return
7 Automatic bleeder valve
9 Valve
17 Draining tap
24 Exchanger primary input
25 Exchanger primary output
26 Hot water filling pump
27 Non-return valve
28 Cold water intake of hot water tank
29 Pressure reducer if mains pressure > 5.5 bar
30 Sealed safety device calibrated to 7 bar
- **a** Cold water inlet with a non return valve
- **b** Connection to the cold water intake of the tank
- **c** Stop valve
- **d** Safety valve and manual draining tap
- **e** Draining outlet

32 Domestic hot water looping pump (optional)
54 YA type load breaking device (health regulations)
57 Domestic hot water outlet ( )
A-B Points for connecting to the heating installation

BUC5003

3 ASSEMBLY

3.1 BUCCANEER GT COMBINATION BOILER

Tools required:
- Phillips head screwdriver
- Wide flat screwdriver
- 13mm spanner

Packaging: the tables below show the numbers of the packages which make up the boiler. The packages are listed in the order in which they are opened for assembly.

Boiler	3	4	5	
Boiler Body	IC1	IC2	IC3	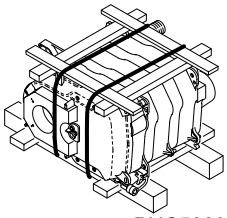 BUC5009
Jacket Pack	IC4	IC5	IC6	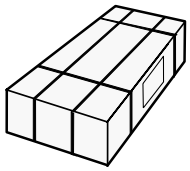 BUC5004
Control Panel - Standard	IC7	IC7	IC7	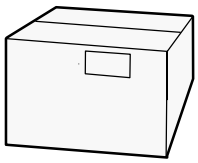 BUC5005
Domestic Hot Water Sensor	AD127	AD127	AD127	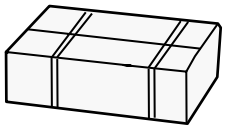 BUC5006
Domestic Hot Water Tank - MLS 150	BH 59	BH 59	BH 59	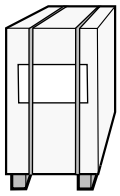 BUC5007
Hydraulic Boiler-to-Tank Connection Kit	BH 46	BH 46	BH 46	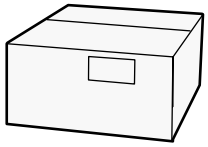 BUC5008

1. See the assembly instruction supplied with burner.
2. See the technical instructions for sensor connection. The assembly of any optional devices purchased with the boiler is described in the instructions supplied with the relevant device or in the control panel instructions. The list of available optional devices is provided in the applicable price list.

1 Package IC1, IC2, IC3

①

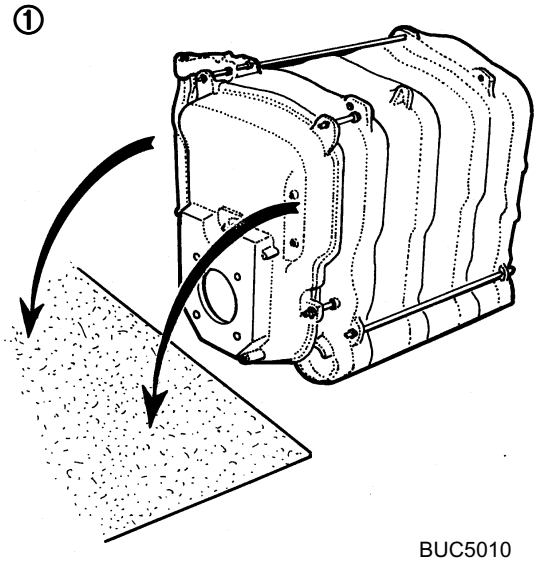

BUC5010

②

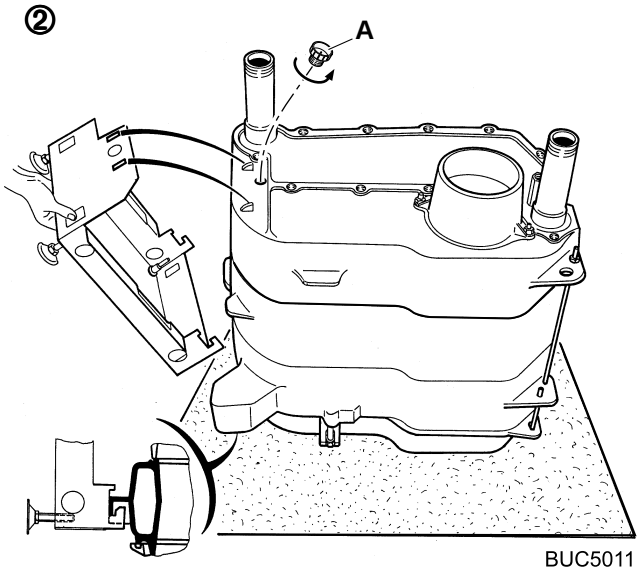

BUC5011

③

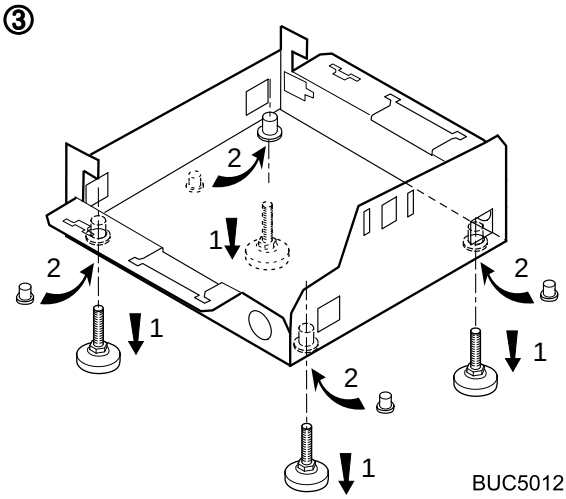

BUC5012

④

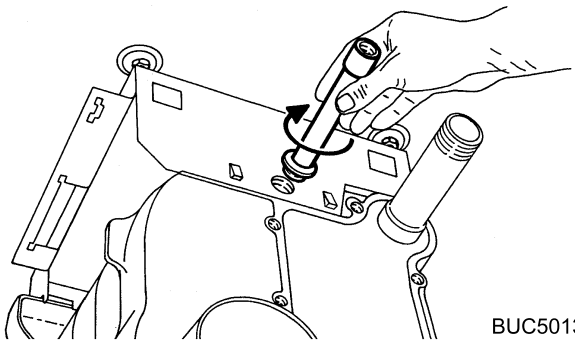

BUC5013

Assembling the base and draining tube

1. Lay a sheet of paper in front of the boiler body, take the boiler body off the pallet and place it standing on the furnace door.
2. Remove the adjustable feet assembled on the base and replace them with the four protective plastic plugs supplied in connection kit package BH 46.
3. Unscrew 1/2" plastic plug **A** from the rear section of the boiler body.

   Fit the base onto the feet of the boiler and clip it onto the rear section.
4. Screw the draining pipe onto the rear section. Make the connection watertight with hemp or filler.
5. Set the boiler body on its feet.

2

Assembling the boiler onto the tank

- Place the boiler on the tank so that it is positioned on the first two marks on the front of the tank.
- Assemble the boiler as instructed in views 3 - 13 of Buccaneer GT boiler Assembly Instructions.

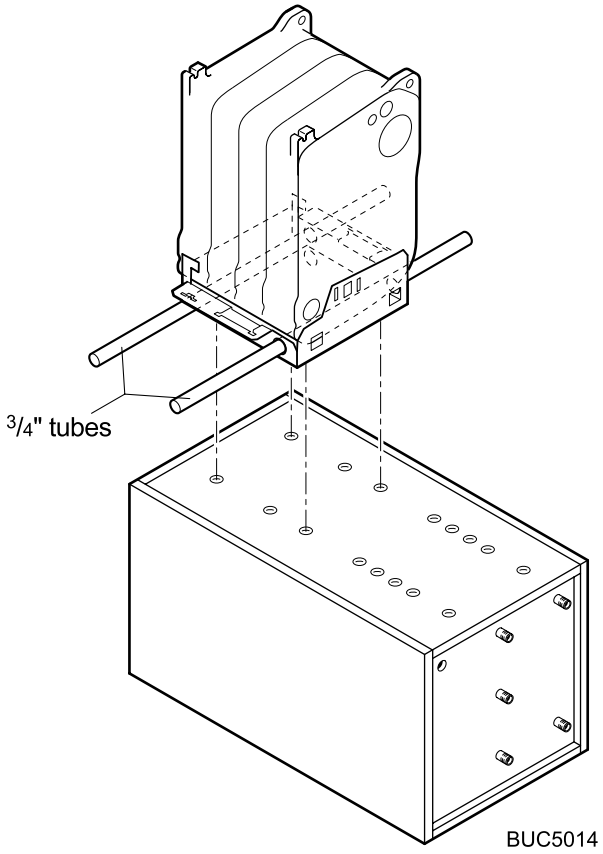

14

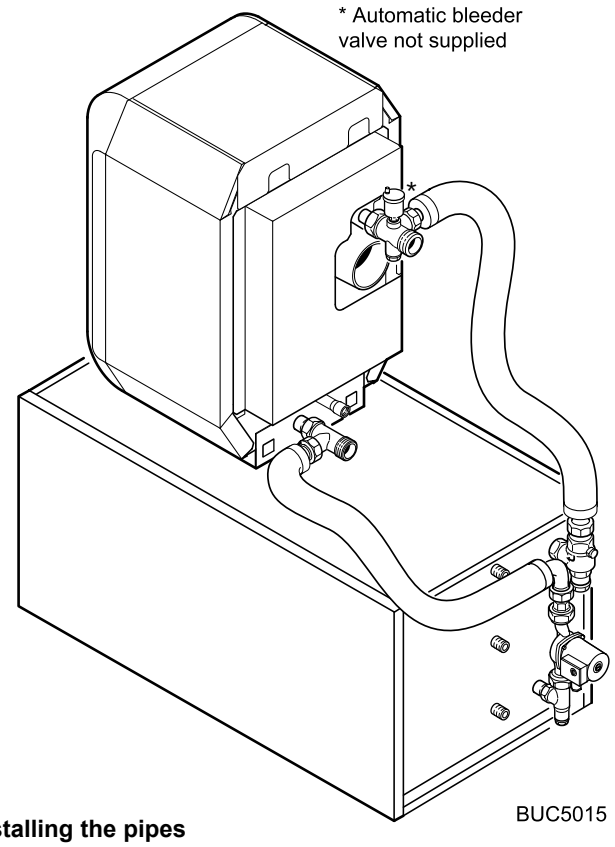

Installing the pipes

- Connect the pipes between boiler and tank (package BH 46) - see the instructions on page13.

15

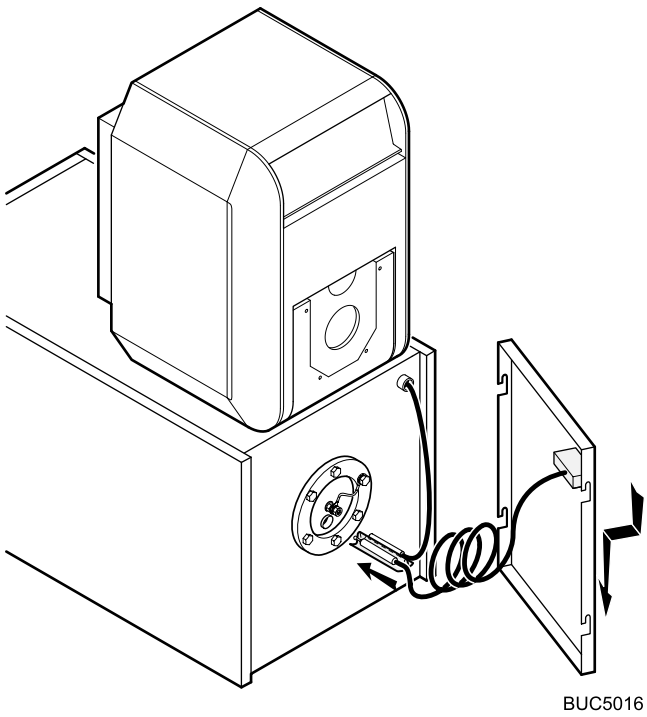

Assembling the tank front panel

- Fit the tank front panel after inserting the thermometer bulb in the thimble tube of the inspection plug of the tank.

3.2 FALCON GTE COMBINATION BOILER

Tools required:
- Phillips head screwdriver
- Wide flat screwdriver
- 13mm spanner

Packaging: the tables below show the numbers of the packages which make up the boiler. The packages are listed in the order in which they are opened for assembly.

Boiler	GTE 4 150	GTE 5 150	GTE 4 250	GTE 5 250	
Boiler Body delivered loose - front section - intermediate section - rear section - set of assembly rods - accessory package	 1 2 1 - IL 4	 1 3 1 - IL 5	 1 2 1 - IL 4	 1 3 1 - IL 5	BUC5039
Mounted boiler body with accessories	IL 24	IL 25	IL 24	IL 25	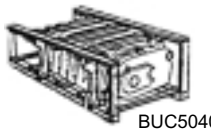 BUC5040
Control Panel - Standard	IC 7	IC 7	IC 7	IC 7	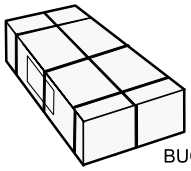 BUC5035
Casing	IL 14	IL 15	IL 14	IL 15	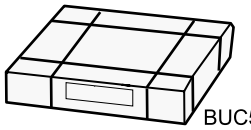 BUC5036
Domestic Hot Water Tank 150 250	BH 59 -	BH 59 -	- BH 9	- BH 9	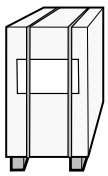 BUC5007
Front Panel of tank	-	-	BH 47	BH 47	
Hydraulic Connection Kit	BH 46	BH 46	BH 46	BH 46	
Domestic Hot Water Sensor	AD 127	AD 127	AD 127	AD 127	

The assembly of any optional devices purchased with the boiler is described in the instructions supplied with relevant device or in the control panel instructions.

The list of available optional devices is provided in the applicable price list.

1. Refer to the assembly instructions supplied with the burner.

37

Assemble the boiler as instructed in figures 1 - 16

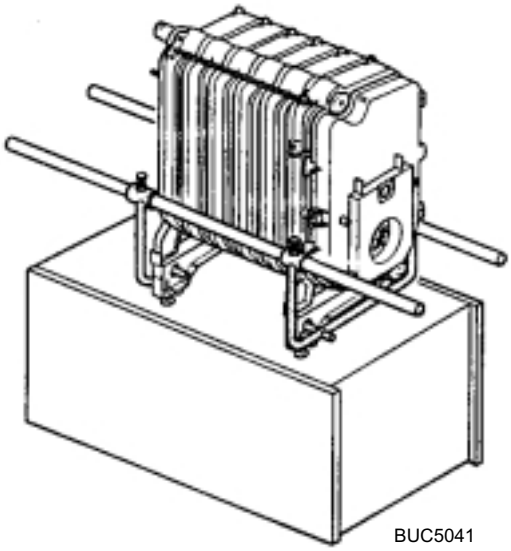

Assembling the boiler on the hot water tank

- Place the boiler on the tank if required with a handling tool (if required).
- Assembly the boiler as instructed in figures 17 - 33 of boiler assembly instructions for Falcon GTE.

38

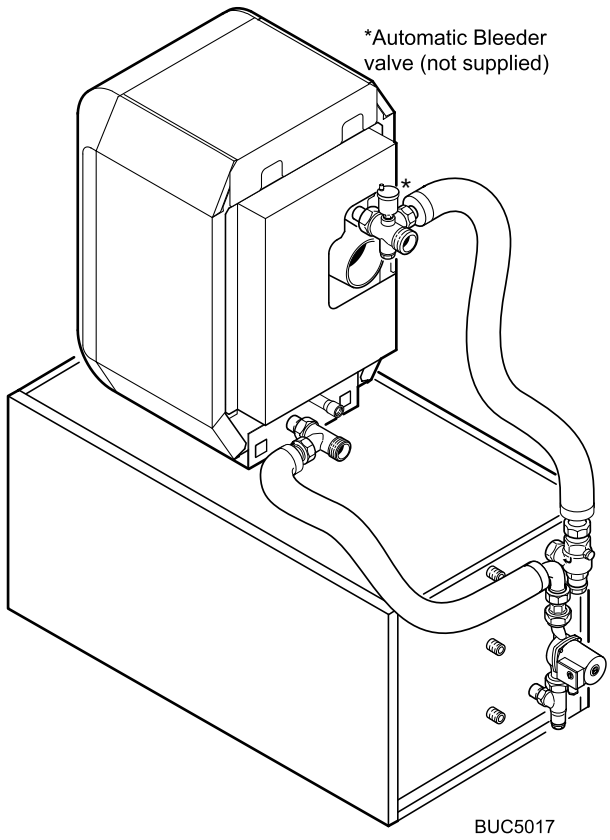

Installing the tubes

- Connect the tubes between boiler and tank (package BH 46) as directed in the instructions on page 13.

39

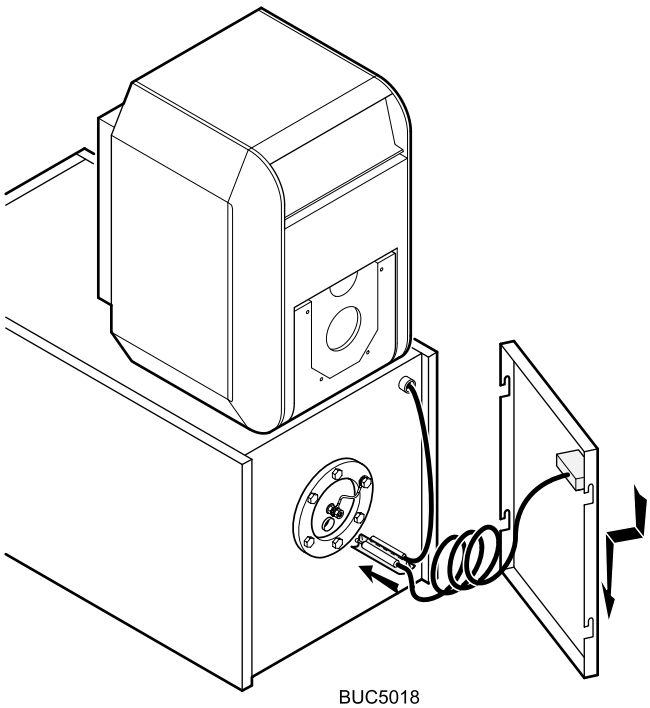

Assembling the tank front panel

- Insert the thermometer bulb in the thimble tube of the inspection plug of the tank (For 250 litre system - separate package BH 47) and fit the tank front panel.

3.3 Hydraulic Boiler to Tank Connections Kit (BH46)

Assembly

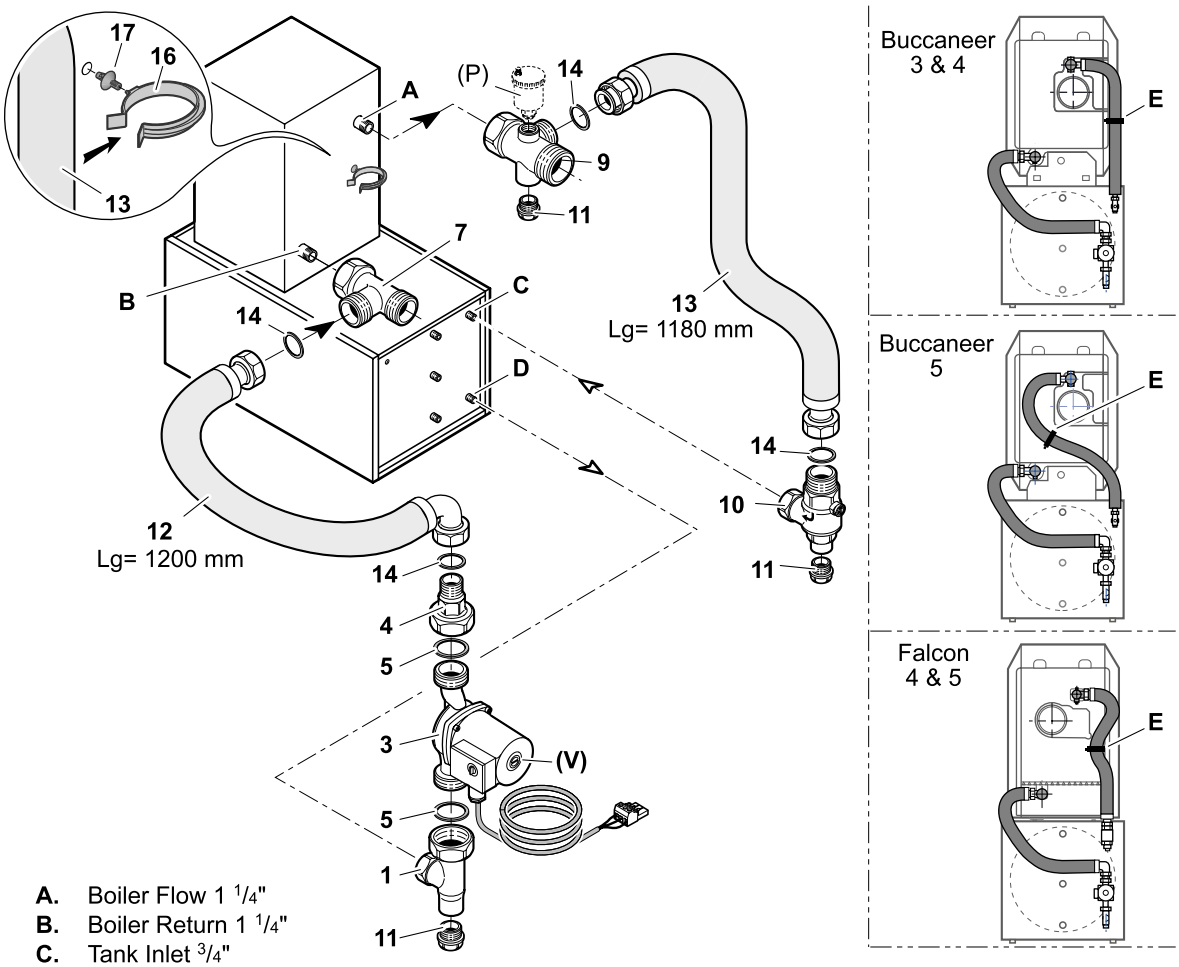

A. Boiler Flow 1 1/4"
B. Boiler Return 1 1/4"
C. Tank Inlet 3/4"
D. Tank Outlet 3/4"
(P) Automatic Air Vent (not supplied)

Connection kit BH46, provides connections from the tank to the boiler.

The kit consists of
- A pump with cable **3**
- Insulated flexible connector **13**, length 1120mm
- Insulated flexible connector with elbow **12**, length 1200mm
- A bag containing:
  - An antisyphon valve **10**
  - Connecting union **4**
  - Tee with union nut **1**
  - Tee **7**
  - Tee with tappings **9**
  - 3 X 1/2" plugs **11**
  - 3 X 1 1/2" O rings **5**
  - 5 X 3/4" O rings **14**
  - 4 X plastic plugs **15**
- Flexible clip **16** with fixing **17**

IMPORTANT
- Ensure access to pump speed control and vent screw **V**
- Ensure flexible connectors are run to prevent air pockets
- The 1/2" plug **11** fitted to Tee **1** can be replaced by a drain cock
- To ensure best venting of the assembly and continued good operation of the installation, an automatic vent (**P**) not supplied, should be fitted on Tee **9** (1/2")
- Screw the Tee with union nut **1** and plug **2** on tank outlet **D**
- Fit the pump **3** to union nut **4** and Tee **1** inserting O rings **5**
- Screw Tee **7** to boiler return **B**
- Screw Tee with tappings **9** with plug **11** to boiler flow **A**
- Screw valve Tee **10** with plug **11** to tank inlet **C**
- Connect elbow flexible **12** (1200mm) between **7** & **4** and flexible **13** (1120mm) between **9** & **10** inserting O rings **14**.
- Assemble flexible clip **16** and fitting **17** then clip them in the 7.5mm hole **E** on the boiler rear panel.
- Fit flexible **13** in clip **16**.

The pump cable allows simple connection to the boiler control box. See Electrical section for further information.

4. CONTROLS

4.1 Description

The boiler connections shall be performed by a qualified professional only.

Strict compliance with these operating and connecting instructions is a precondition for the correct operation of the boiler

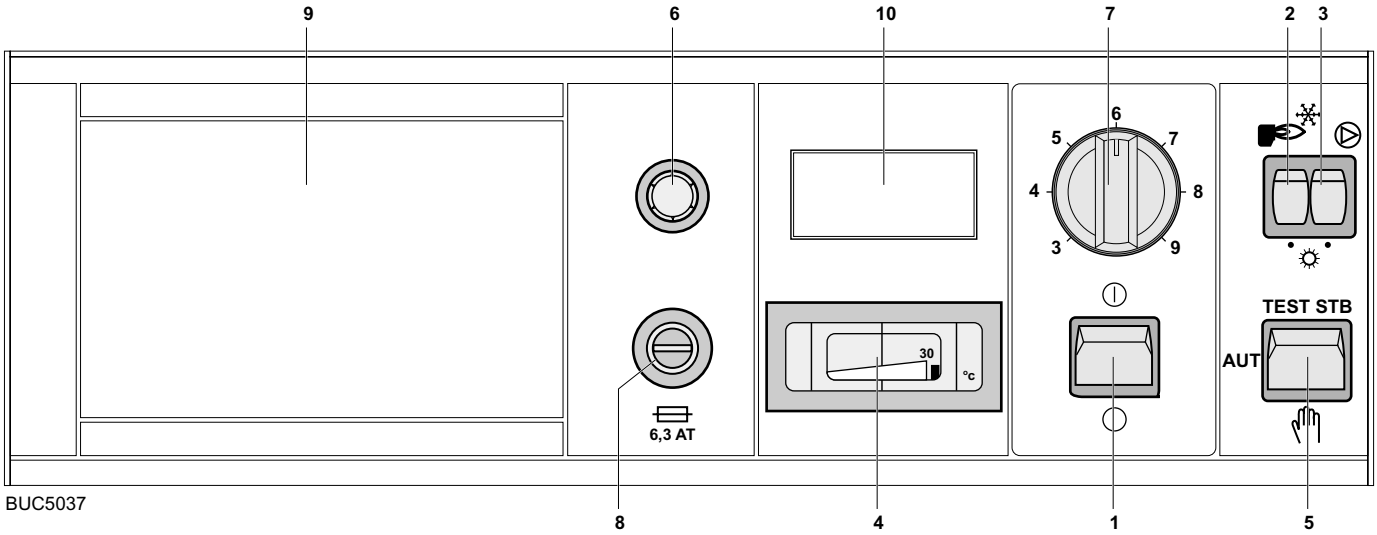

1. **On ⓘ / Off ○ switch.**
2. **Burner switch:** turning the heating off (summer position ☼) or on (winter position ❄) by turning off/on the burner and the pump (domestic hot water production continues).

   For an MB1 domestic hot water priority module the switch is disabled by the control device.
3. **Heating pump switch:** used to turn the heating pump off (summer position ☼) or on (winter position ❄).

   For an MB1 module it must be set to the winter position ❄.
4. **Boiler thermometer.**
5. **Three-position switch:**

   ✋ **: manual position,** used when the boiler is **not fitted with** a room thermostat.

   The boiler temperature is regulated by boiler thermostat 7.

   This position may be used to test the burner of installations fitted with a room thermostat.

   AUTO : automatic position, used for normal operation of boilers. The boiler temperature is regulated by the connected device.

   TEST STB : momentary use to test the safety thermostat.
6. **Safety thermostat** with manual reset (factory setting 110ºC).
7. **Boiler thermostat** with 30 - 85ºC adjustment range. However, the built-in stop limits the maximum temperature to 75ºC. The stop may be moved if required.

   The boiler thermostat must necessarily be set to the maximum position if a room thermostat is used.
8. **6.3 AT fuse.**
9. **Location for MB1 module** (also refer to the instructions supplied with the device).
10. **Location for an optional time counter.**

    Boilers with the domestic hot water facility:

    A potentiometer for setting the temperature of the domestic hot water is located on the MB1 module casing (graduated from 1-8).

4.2 Operating Principle

Control Panel

The boiler temperature is regulated either by the boiler thermostat or any room thermostat. The safety of the installation is achieved via the safety thermostat with manual reset.

Heating Regulation

The heating is regulated in different ways (manual mixing valve, thermostatic valves etc.). It is up to the fitter to explain to the user how the heating is regulated.

Domestic Hot Water Regulation (Versions with MB1)

The presence of a filling pump and an antithermosiphon valve on the primary circuit of the hot water production system means that the domestic hot water temperature is kept correctly regulated. The temperature of the domestic hot water is set by means of a potentiometer located on the MB1.

When the domestic hot water is reheated, the burner and the primary filling pump are started up, whilst the heating pump is stopped. The boiler temperature is controlled by the limiting thermostat built into the MB1 module (the thermostat is factory set to 80ºC). When the need for hot water is met, the burner is turned off and the filling pump continues to operate for 4 minutes after the burner stops (the delay is adjustable from 30 sec to 15 min). In this way, the residual heat accumulated in the heating elements is used to complete reheating the tank.

4.3 Electrical Connections

The electrical wiring has been carefully checked in the factory and the internal connections of the control panel must not be modified in any event.

The electrical connections of the boiler shall be made in compliance with applicable standards and regulations in force.

The unit shall be powered by a circuit with an omnipole switch with an opening distance greater than 3 mm.

WARNING

Electrical connections shall be carried out by a qualified professional only.

The connecting cables may be brought inside the boiler through the cut-outs provided in the cover of the boiler, which may be used along with purchased cable channels.

Fasten the cables to the rear plate of the control panel by means of the cable clamps (supplied in the instructions bag), after mounting them on the plate.

The pump cable has a connector fitted. Discard the connector.

WARNING

VERY IMPORTANT: never place sensor cables (extra low voltage) and 230 V power supply cables in the same cable channel or duct.

All the connections shall be made to the connection strip provided for that purpose outside the volume of the control panel.

Refer to Boiler Assembly Instructions for Control Panel Installation

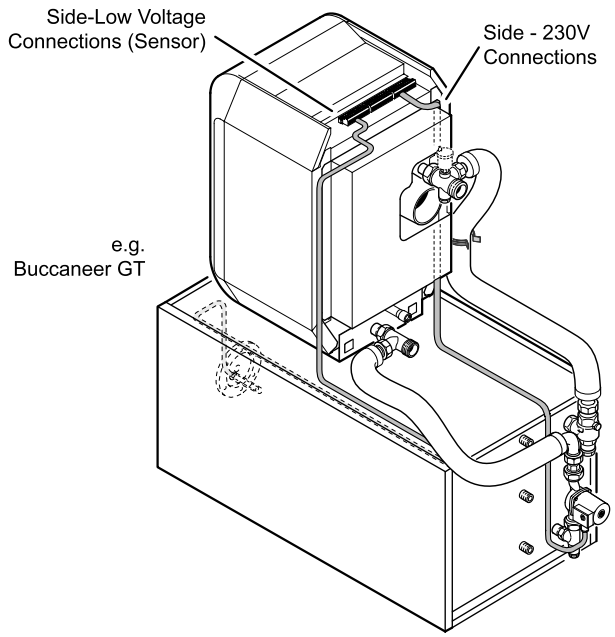

4.4 Installation with MB1 Domestic Hot water Priority and Regulation Mode

Fitting and Connecting the MB1 Module

Fit the MB1 module on the front of the control panel. Proceed as follows:

1. Remove the cover: cut the four fixing studs of the cover with a knife and fold it outward.
2. Install and connect the MB1 module as directed on pages 16-18.

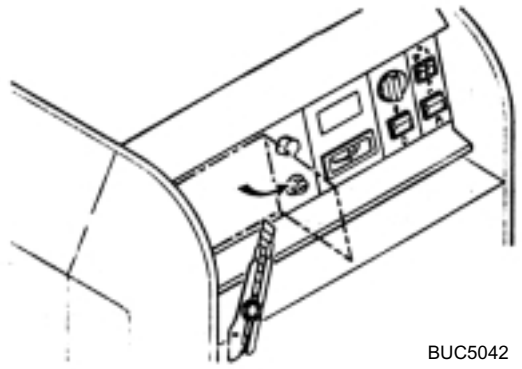

- Install domestic hot water sensor cable **A** (e.g. for Buccaneer GT) as shown and fix it with plastic clips **B**.
- Insert the sensor in the thimble tube of the tank.
- Connect as directed in the diagram on the following pages.
- Insert the bulb of the limiting thermostat in the thimble tube on the rear of the boiler.

Tank Sensor

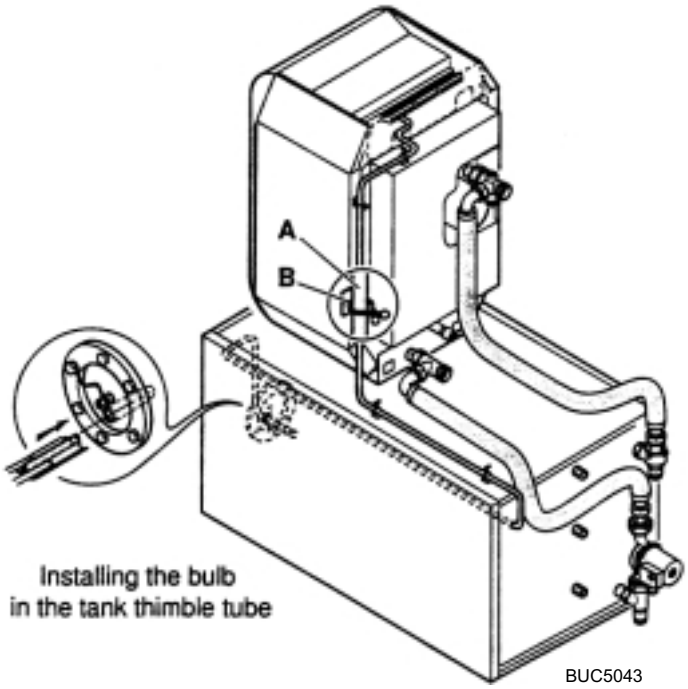

Boiler Sensor

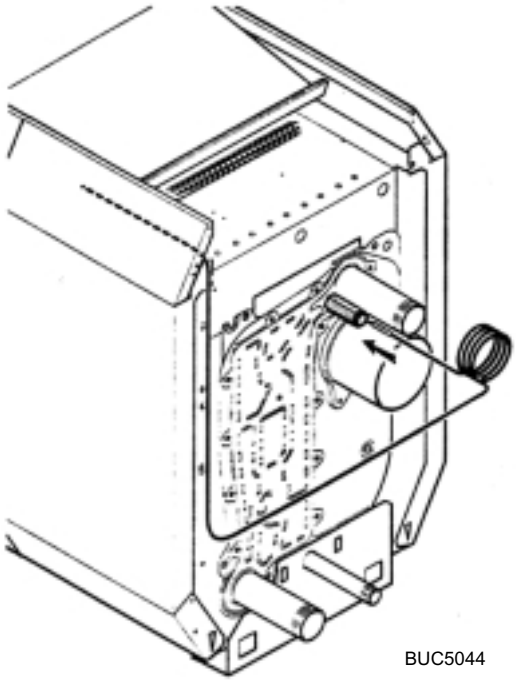

4.5 MB1 Domestic Hot Water Sensor

Operating and Installation - Package AD127

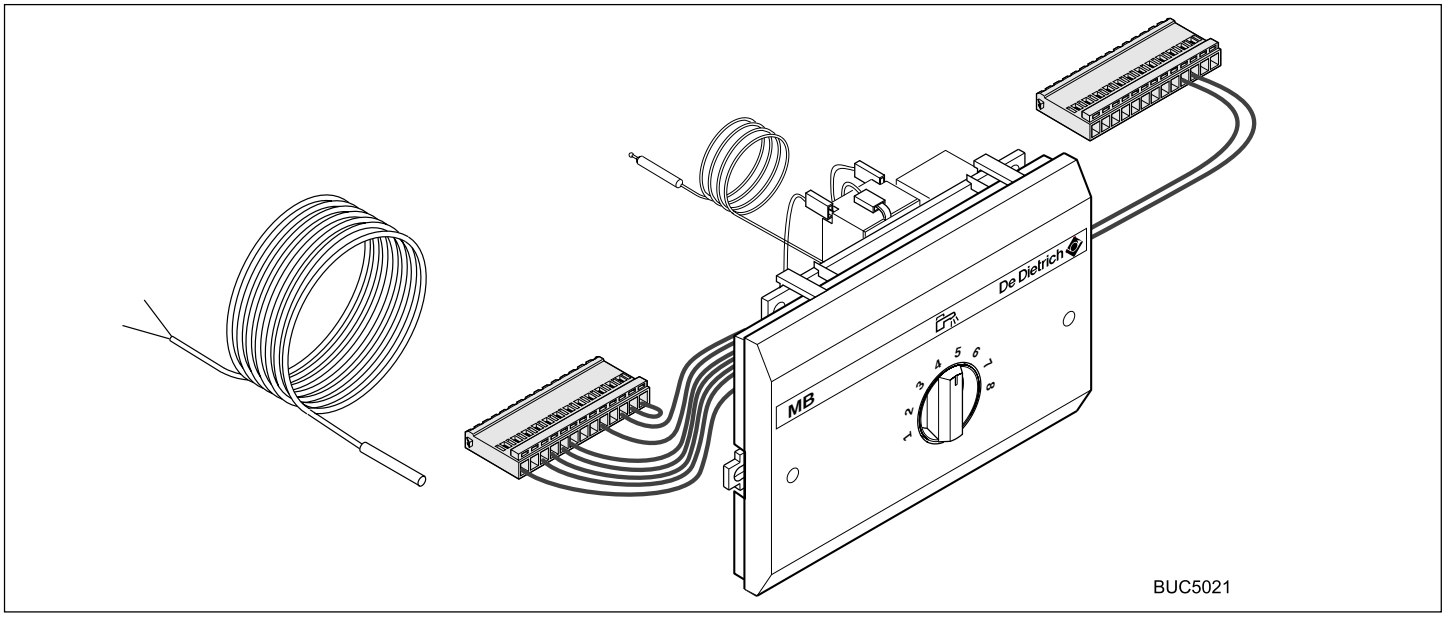

The MB1 module allows for regulation of the storage temperature and ensures priority for the production of hot water for sanitary systems. When there is a demand for the sanitary hot water to be reheated, the MB 1 module activates the burner and the tank charging pump, and stops the circulation of the heating system. The period during which the heating circulator is switched off depends on the volume of water being pumped round the system, the power of the boiler which is connected, and the performance values of the sanitary hot water preparation unit.

A limiter thermostat, set at the factory to 80ºC, regulates the temperature of the boiler during the charging of the sanitary system.

The timing device of the pump overrun (4 minutes), after the burner has been switched off, allows for the residual heat accumulated in the body of the heating unit to complete the reheating of the preparation unit.

1. Instructions for use

Regulating the storage temperature of hot water for sanitary systems:

The regulating button **A** allows for the average temperature of stored sanitary hot water to be adjusted between 10 and 80ºC, with a hard point at **6** (about 60ºC).

In the event of prolonged absence:

In order to ensure that the sanitary hot water tank is protected against frost, set the regulating button **A** to the position 1 (this setting corresponds to a temperature of about 10ºC).

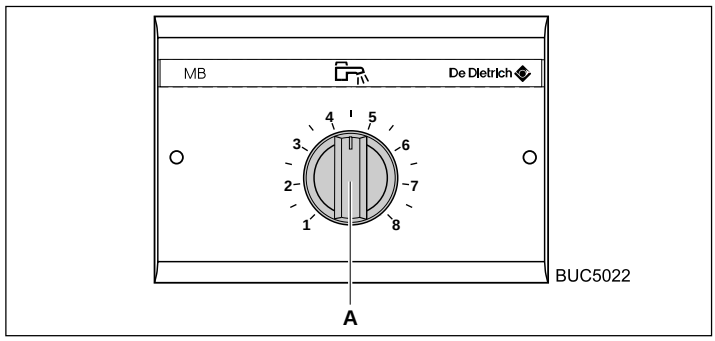

2. Adjusting the timing of the charging pump

The timing device for stopping the charging pump allows the pump to keep operating for **4 minutes** (factory setting) after the setting temperature for the sanitary system has been reached. This allows the residual heat accumulated in the body of the heating unit to be used to complete the reheating of the sanitary hot water.

Adjustment: This timing device can be adjusted from 3 to 6 minutes, with the aid of the potentiometer located on the back of the unit.

Taking the timing device out of operation: To take the timer out of operation, remove the bridge unit located on the back of the device, as shown in the drawing opposite.

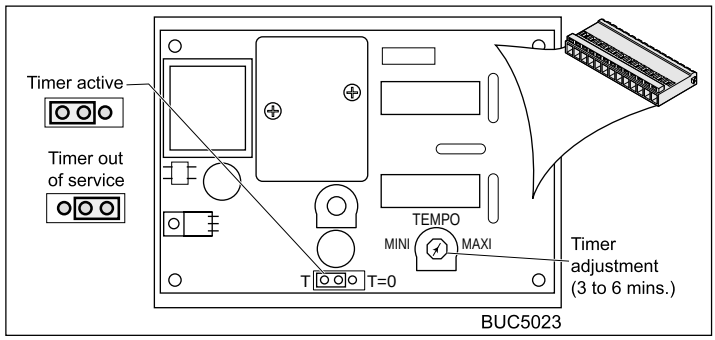

3. Adjusting the limiter thermostat

It is possible to change the setting of the limiter thermostat, over a range from 30 to 90ºC, the original setting being 80ºC. To do this:

- Take the module out of the boiler console, if applicable;
- Remove the setting button, by drawing it towards yourself;
- Unhook the PCB;
- Adjust the limiter thermostat in accordance with the reference settings shown in the diagram opposite, with the aid of a flat screwdriver;
- Reassemble the unit by proceeding in the reverse order.

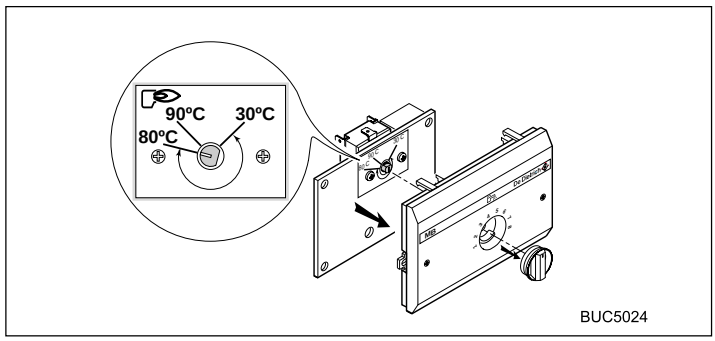

4. Installation and Connection

For all boilers:

- **Remove the TL bridge**, connected to the terminal strip of the boiler control console, with terminals **1** and **2** to terminals **1** and **3**.
- Withdraw the **LP** bridge at terminals **4** and **5** in order to do away with an ECS priority.

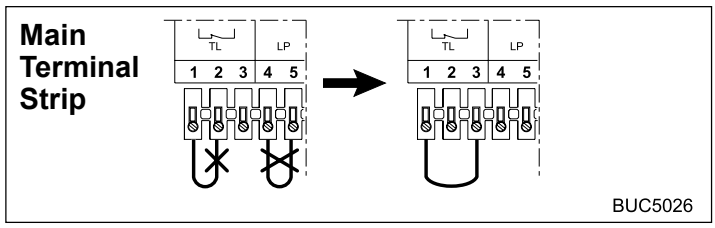

- Remove the panel **A** from the control console of the boiler (refer to the technical instruction plate).
- Connect the connector elements **B** and **C** of the module to the connectors **D** and **E** coming from the boiler control console (blue on blue, red on red).
- Attach the earthing wire **F** to an earthing terminal of the control console.

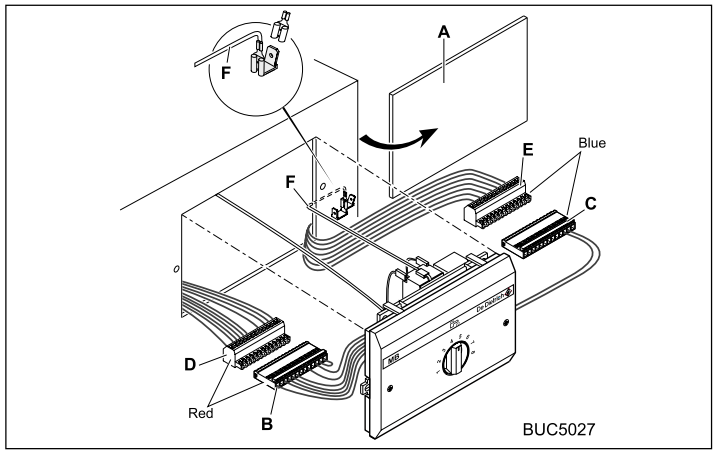

- Introduce the bulb **G** of the limiter thermostat into the boiler pocket.
- Connect the charging pump to the boiler control console, ensuring that the terminals live (L), neutral (N) and earth (⏚) are properly attached.
- Connect the probe bulb to the boiler control console.
- Introduce the probe bulb into the pocket of the sanitary hot water tank.

If the tank is already fitted with a thermostat, it will not be used : accordingly replace the bulb of this thermostat with the tank probe.

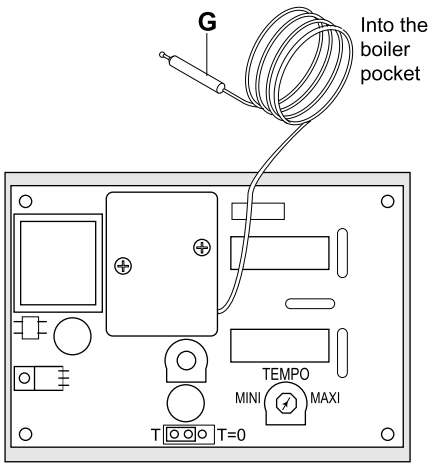

BUC5028

WARNING

IMPORTANT: Under no circumstances may the wires of the probe (very low voltage) and wires carrying 230 V supply feed be placed in the same conduit or cable duct. Make sure that a minimum interval of 10 cm is maintained between them. Failure to do so can cause interference and lead to malfunction of the control system and the deterioration of the electronic circuits.

Securing the module

Mount the module by the front so as to secure it with the help of the two screws located on the front section (use a cruciform (Phillips) screwdriver).

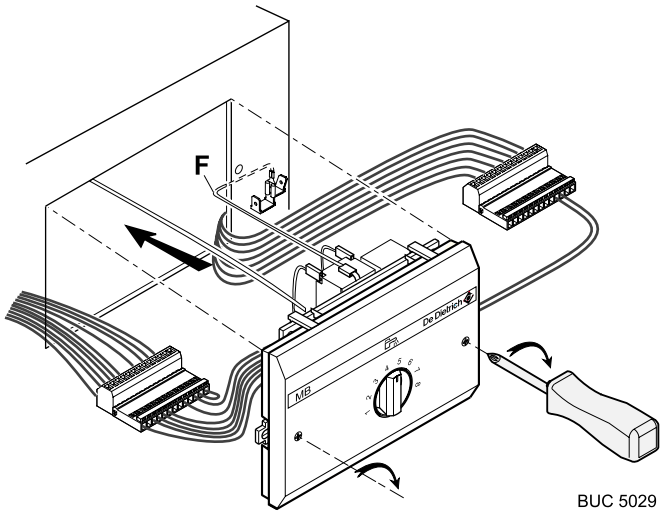

BUC 5029

Connections (Installation with MB1 Module)

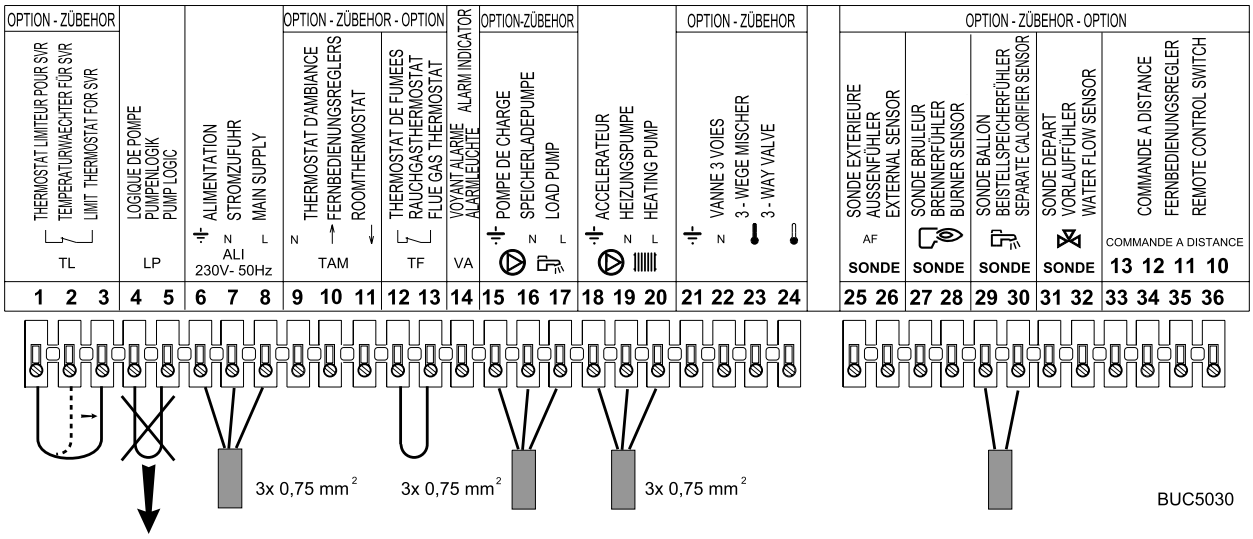

BUC5030

- Move bridge **TL** from terminals 1-2 to terminals 1-3.
- Remove bridge **LP** from terminals 4-5.
- Connect the power supply, the heating pump and the tank load pump as shown.
- Connect the tank sensor.

WARNING

If the installation includes an MB1 module and **no** room thermostat (TAM), set three position switch **5** (see page 14) to ✋.

If the installation includes an MB1 module **and** a room thermostat (TAM), set three position switch **5** (see page 14) to **AUTO**.

4.6 Heating and Domestic Hot Water Installation (with MB1 module)

WARNING

IMPORTANT: If the installation includes an MB1 module and **no** room thermostat (TAM), set three position switch **5** (see page 14) to ✋.

If the installation includes an MB1 module **and** a room thermostat (TAM), set three position switch **5** (see page 14) to **AUTO**.

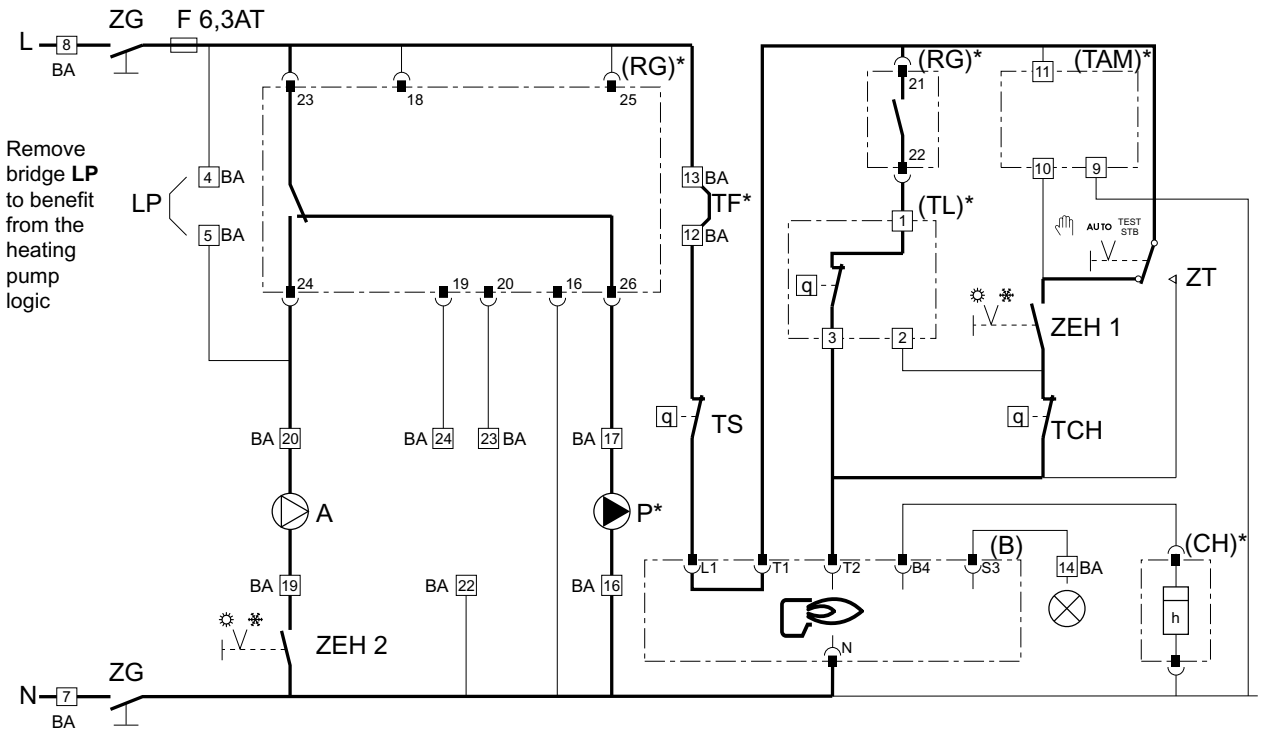

A	Heating pump	**RG**	Control unit	**ZEH2**	Heating pump Summer/ Winter switch
B	Burner	**TAM**	Room thermostat		
BA	Connection strip	**TCH**	Boiler thermostat	**ZG**	Main switch
CH	Time counter	**TF**	Flue gas thermostat	**ZT**	Test switch
CS	Safety contact	**TL**	Limiting thermostat	*	Optional
F6, 3AT	Fuse	**TS**	Safety thermostat		Connecting strip
L	Phase	**VA**	Alarm indicator		Connector
LP	Pump logic	**V3V**	Three-way valve		
N	Neutral	**ZEH1**	Burner Summer/ Winter switch		
P	Filling pump				

BUC5031

4.7 Connecting the Burner

The boiler is fitted with a cable with a 7-pin European connecting plug which can be plugged into the socket supplied with the burners (see the instructions supplied with the burner).

5. COMMISSIONING

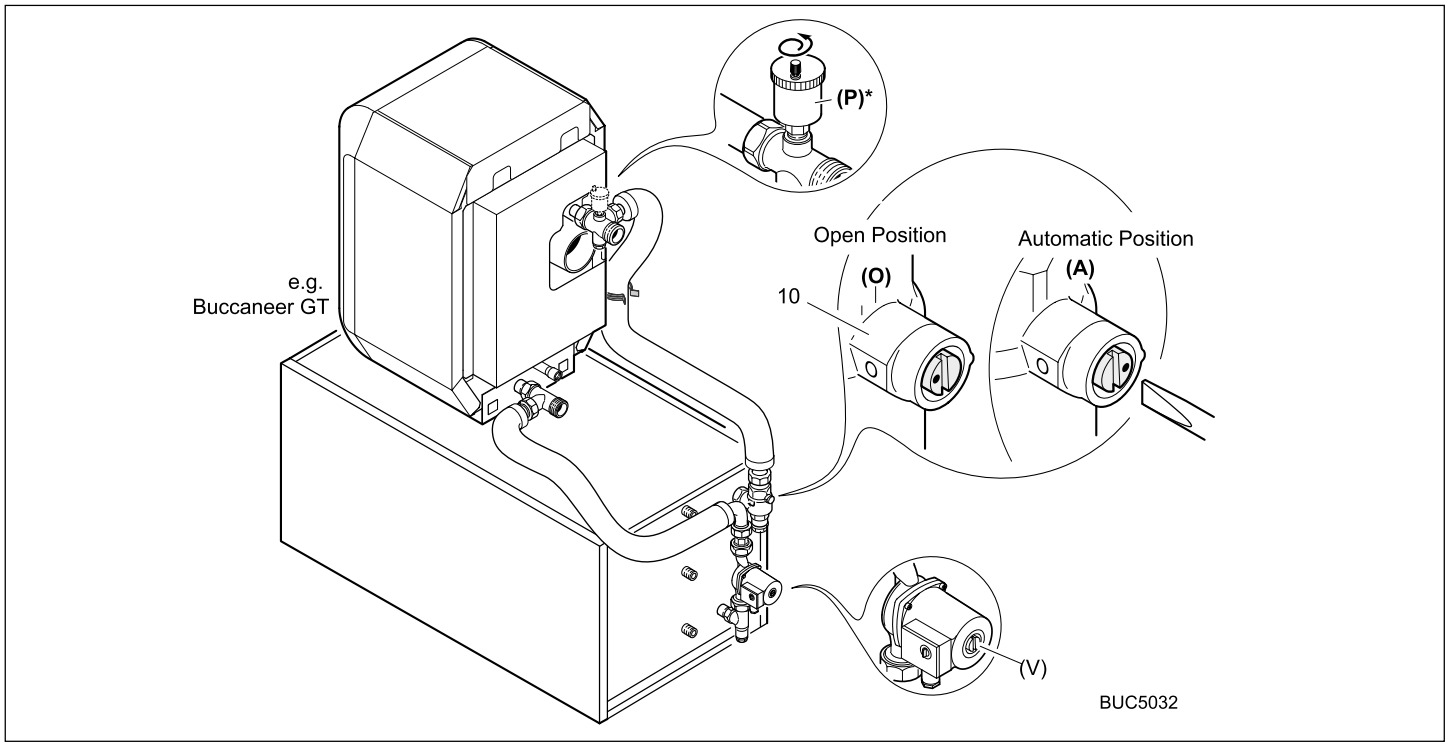

- Ensure connections are watertight.
- Vent the tank heat exchanger as follows:
  1. Unscrew the auto vent cap **(P)*** a few turns.
  2. Turn the antisyphon valve screw **10** to open position **(O)**
  3. Close the vent **(P)*** when water flows continuously.
  4. Return the antisyphon valve screw **10** to the automatic position **(A)**
  5. To vent the pump, unscrew the protection cover in the pump head and turn the pump shaft **(V)** left and right a few times.
  6. Leave the pump running with cold water for a few minutes to prime the system.

  (* Not supplied)

5.1 Starting Up

Initial starting up shall be performed by a qualified professional.

Before turning the boiler on, make sure that the installation is filled with water.

Perform the start-up operations in the chronological order given below, referring to the diagram on page 14.

- Set boiler thermostat **7** to the selected position (move the stop if required).

WARNING

IMPORTANT: if the boiler is fitted with a room thermostat, set boiler thermostat 7 to the maximum position.

- Set the domestic hot water temperature setting potentiometer to the desired temperature (versions with MB1).
- Check the position of three-position switch **5**, which must be as follows:
  - either set to manual ✋: boilers **without** room thermostats
  - or set to **AUTO** (automatic): boilers **with** room thermostats.
- Make sure that safety thermostat **6** is set by unscrewing the hexagonal cap and pressing the reset button with a screwdriver.
- Turn On/Off switch **1** to On ⏻.
- Turn burner switch **2** to Winter ❄.

If the boiler is fitted with an MB1 domestic hot water module, this switch is disabled by the optional unit.

Turn heating pump switch **3** to Winter ❄.

Note: We advise you never to set the boiler thermostat below mark **4** (40ºC) in order to avoid the risk of combustion products condensing on the walls of the boiler.

5.2 Commissioning Secondary Circuit

- If needed, flush the sanitary circuit (especially if re-starting) and fill the tank using the sanitary cold water inlet pipe.
- Bleed the secondary circuit (tank and distribution system) in order to avoid any noise caused by trapped air moving during re-heating and drawing off. To do this, fill it completely with water, leaving a hot water tap open; close this tap only when the flow of water is continuous and noise-free.
- Then bleed in succession all hot water pipes by opening the corresponding taps.
- Bleed the tank's exchanger circuit using the vent made for the purpose.
- Check all safety units (especially the safety valve or group) referring to the leaflet supplied with the component.

WARNING

During the heating of domestic hot water, some water may escape through the safety valve or group as a result of the expansion of water in the unit. There is no cause for concern as this is entirely normal. Do no attempt to prevent this from happening

6. MAINTENANCE AND PERIODIC CHECKS

- **Safety valve or group**

> **WARNING**
>
> **IMPORTANT**: **The safety unit must be used periodically (at least once per month).** To do this, place the safety group in the draining position. This allows the evacuation of any deposits which could eventually obstruct the safety group valve. **Non-compliance with this requirement could result in a deterioration of the unit's tank** (see notice enclosed with the safety unit).

- **De-scaling:**

  in hard water regions, it is advisable to ask the installer to carry out an annual de-scaling of the tank exchanger so that it will retain its performance.

Operations to be carried out during the de-scaling, visual checks and replacement of the magnesium anode.

- Shut off the cold water supply and drain the tank. To drain it via the safety unit, put the latter into the drainage position and open a hot water tap so that air can enter.
- Take off the front panel and the probes.
- Take off the cover (13 mm spanner).
- If necessary, replace the anode.
- Remove all the scaling deposits from the bottom of the tank.

  The exchanger must be de-scaled in order to guarantee its proper operation.

- **Magnesium anode**

The magnesium anode must be checked at least every two years. Starting with the first check and taking account of the wear to the anode, the frequency of the following checks must be decided. The anode can be checked according to one of the following two methods:

- **Visual check:**

  The anode must be replaced if its diameter is less than 15mm (initial diameter = 33mm)

- **Check by measurement:**
  - Disconnect the earth wire to the anode.
  - Measure the current between the tank and the anode; if the current is less than 0.1 mA, the anode must be replaced.

- The outside of the unit can be cleaned with soapy water.
- Replace the inspection cover taking care to place the salt rod at the bottom and refit the washer:
  - position the lip seal in the inspection hole, being careful to place its tongue outside the tank.
  - position the retaining ring around the seal, placing the tongue above the ring.
  - Refit the cover, salt rod at the bottom, on the flange, tightening the 6 bolts evenly across the diameter of the cover.

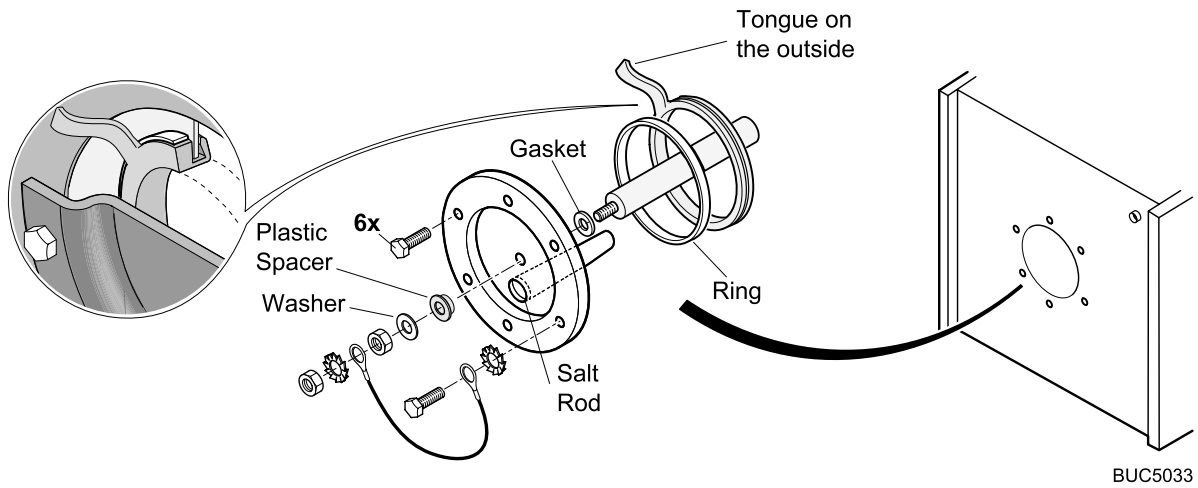

NOTES

NOTES

Caradon Plumbing Limited, P.O. Box 103, National Ave, Kingston upon Hull, HU5 4JN. Telephone: 01482 492 251 Fax: 01482 448 858. Registration No. London 322 137.

Technical Training

The Caradon Plumbing Limited Technical Training Centre offers a series of first class training courses for domestic, commercial and industrial heating installers, engineers and system specifiers.

For details of courses please ring: *01482 498432*

Caradon Plumbing Limited pursues a policy of continuing improvement in the design and performance of its products. The right is therefore reserved to vary specification without notice.

February 2001 156597 A01

Ideal BOILERS

Ideal Installer/Technical Helpline: 01482 498 376

www.idealboilers.com